NEOREST SERIES

NEOREST EW WASHLET

DE: NEOREST EW WASHLET, inkl. Fernbedienung
FR: NEOREST EW WASHLET, télécommande incluse
RU: NEOREST EW WASHLET, с дистанционным управлением
IT: NEOREST EW WASHLET, con telecomando
NL: NEOREST EW WASHLET, incl. afstandsbediening

PRODUCT DETAILS	
Product code	TCF994WG#NW1,TCF994WSW#NW1 (CH)
WASHLET	TCF994WGE#NW1 (UK)
Product code WC	CW994P#NW1
EAN code	40 50663 09301 3, 40 50663 09303 7 (CH)
WASHLET	40 50663 09302 0 (UK)
EAN code WC	40 50663 09304 4
Size	w:423xd:675xh:410 (mm)
Colour	White
Material	WC: ceramic, WASHLET: plastic
Technologies	Warm water nozzle, Heated seat, Deodoriser, Dryer, ewater+, Water-saving, Tornado Flush, CeFiONtect, Rimless design, Auto functions

Weights and measurements shown may be subject to small variations or are indicative.
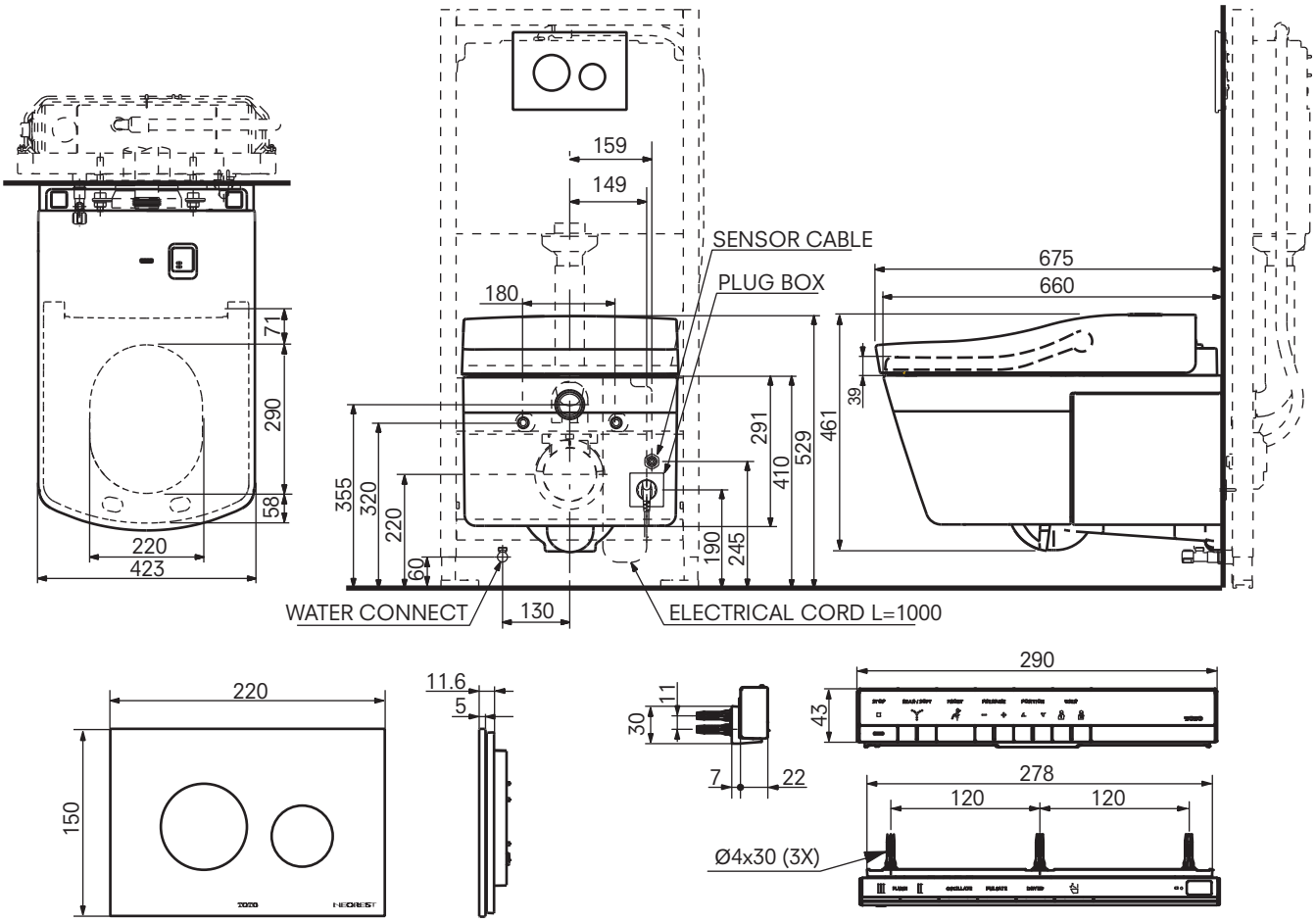
TECHNICAL DRAWINGS