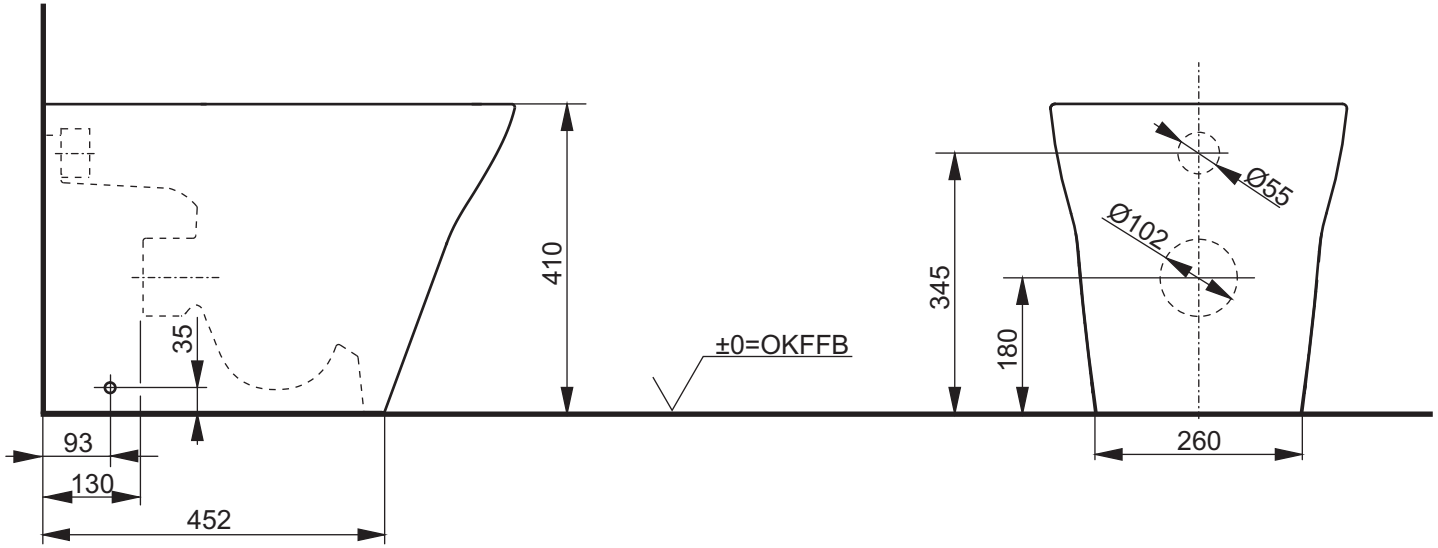

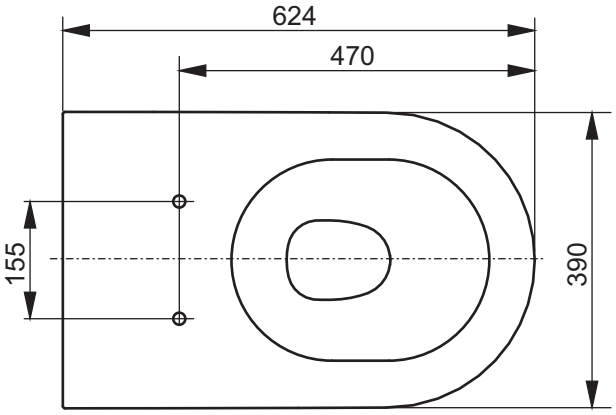

CAN BE COMBINED WITH:

1.	MH WC seat with soft-closing	VC10047NR
2.	WASHLET EK 2.0	TCF6632G#NW1, TCF6632GE#NW1(UK), CF6632SW#NW1 (CH)
3.	WASHLET GL 2.0	TCF6532G#NW1, TCF6532GE#NW1(UK), TCF6532SW#NW1 (CH)
4.	WASHLET EK	TCF6402G, TCF6402GE (UK), TCF6402SW (CH)
5.	WASHLET GL	TCF891G, TCF891GE (UK), TCF891SW (CH)

Designation

MH SERIES
WC, back-to-wall CW163Y

TOTO

Altered		Scale	1:10
		Signed	T.G.
		Date	18/05/2015

This drawing including the respective data may neither be duplicated nor modified nor altered without the consent of TOTO Europe GmbH. The usage of the data/technical drawings takes place at user's own risk and under exclusion of any liability of TOTO Europe GmbH and/or of the companies of the TOTO-Group. The indicated dimensions are not binding; products are subject to change. Measurements shown may be subject to small variations or are indicative.